'TruFlush' Dual-Flushometers Installation Instructions

Product Codes: TRF42024 | TRF42036

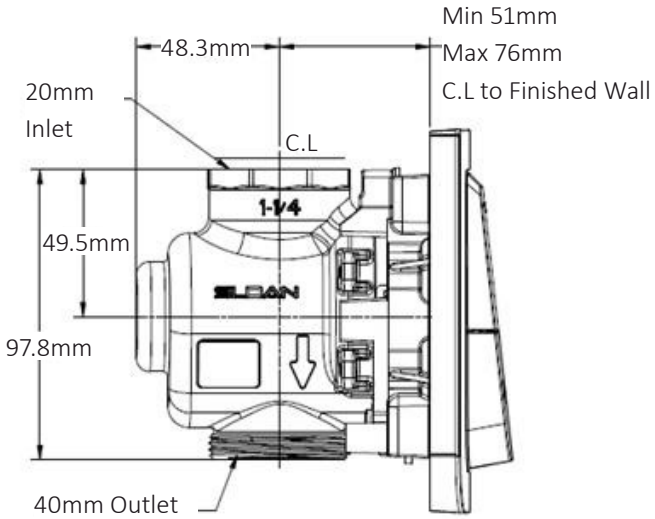

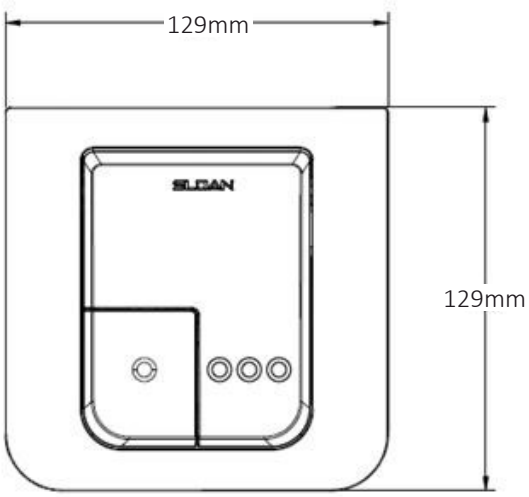

Items included plus an Installation Manual

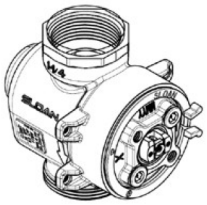

1 x Valve assembly

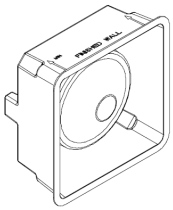

1 x Mud guard

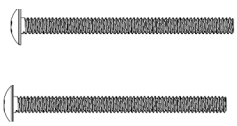

2 x #10-32 x 2-1/2 screws to secure the mud guard

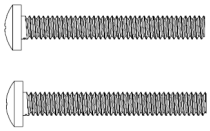

2 x 1/4"-20x2" screws to remove activation assembly

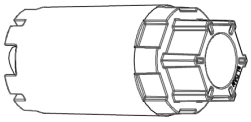

1 x Activation assembly adjustment tool



1 x Reducing connector 32x20

Wall Opening Measurements	*(mm)*
Min. wall plate opening	102 x 102
Max. wall plate opening	114 x 114

Prior to Installation

The Flushometer must be installed as per AS-3500, the Australian plumbing code and any other local and applicable codes.

Note

- Mud guard is provided and must accompany valve for proper installation
- Mud guard to be removed after the wall is finished

Tools Required for Installation

- Phillips screwdriver
- Activation assembly adjustment tool (supplied)
- Leveler

(03) 9399 8444
sales@magspp.com.au
www.magspp.com.au

Disclaimer: Specification subject to change without prior notice
**Image is for illustration purposes only.*

'TruFlush' Dual-Flushometers Installation Instructions

Rough-In: TRF42024 | TRF42036

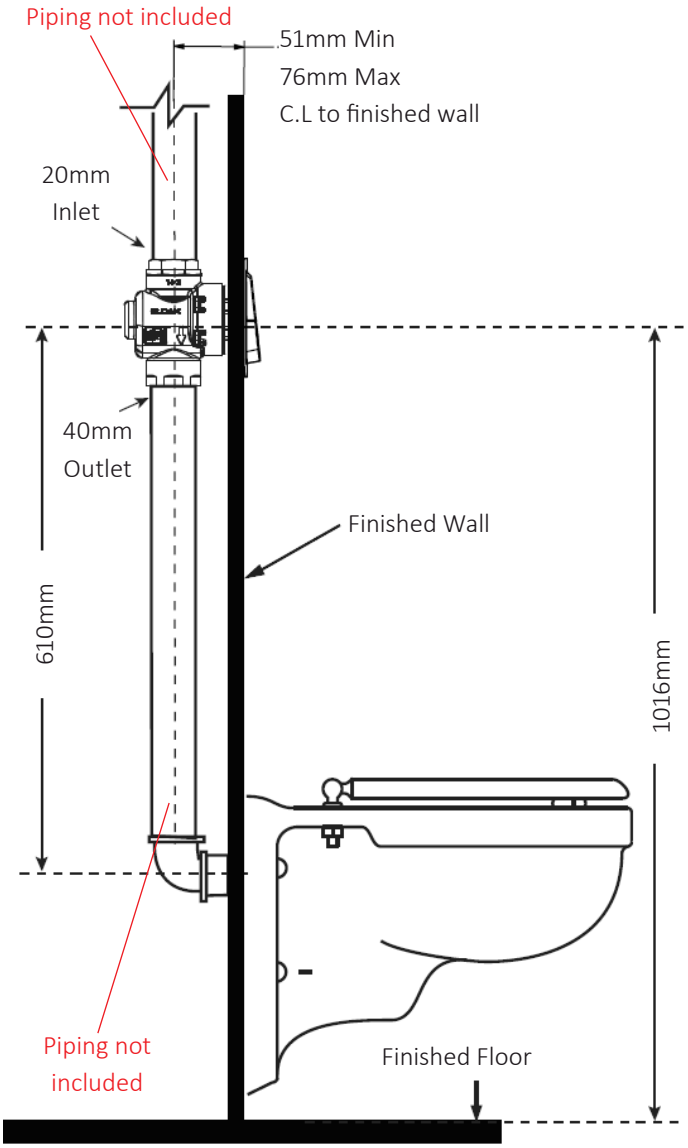

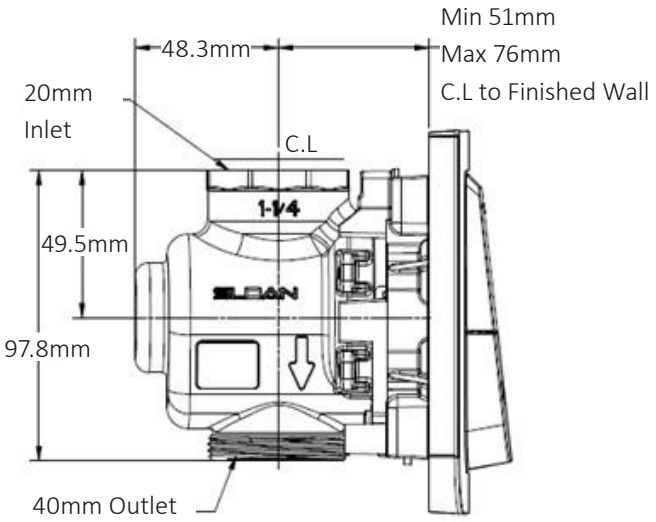

Wall opening measurements:

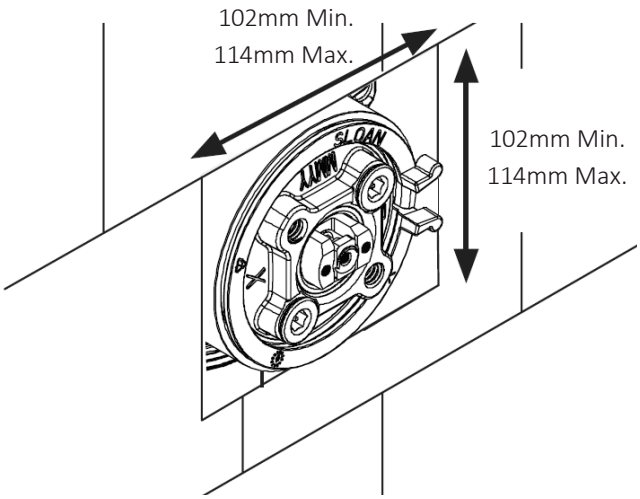

Note:

Sloan's Flushometers are designed to operate with 150 - 550kPa of flowing water pressure. The minimum pressure required to the valve is determined by the type of fixture selected. Consult fixture manufacturer for minimum pressure requirements. Most high efficiency water closets require a minimum flowing pressure of 172kPa. With the exception of the inlet, do not use pipe thread sealant. Do not use plumbing grease on valve components or couplings.

'TruFlush' Dual-Flushometers Installation Instructions

Picture for illustration purposes only

1. Connect Flushometer

1. Remove the mud guard and save for later use - **DO NOT DISCARD**.

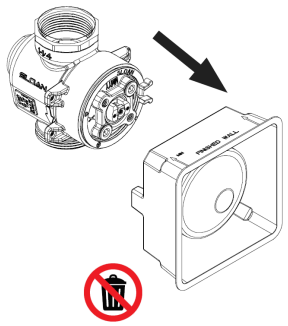

2. Apply teflon tape on reducing connector and connect to top ("IN") of flushometer. There must not be any leakage.

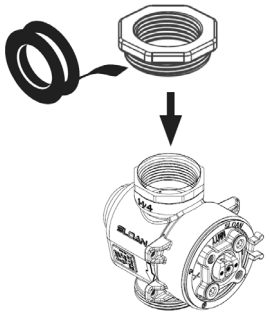

3. Connect inlet pipe to reducing connector and fixture flush connection to bottom ("OUT") of flushometer.



4. Reinstall mud guard to valve. Use the mud guard screws (supplied).

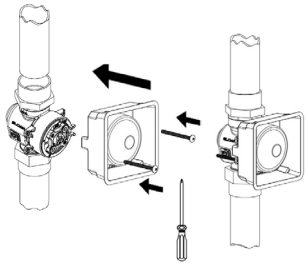

5. Check if valve is level as shown below.
Note: Reinstall the mud guard using mud screw if needed to remove during adjustment.

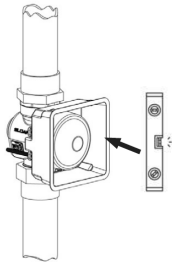

Check level from front side of mud guard

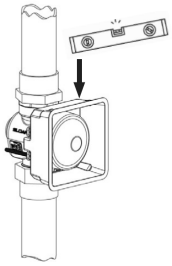

Check level from top side of mud guard

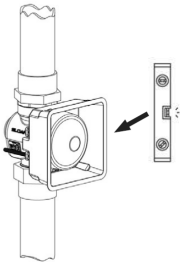

Check level from left or right side of mud guard

2. Finish Wall

1. Finish the wall. Use the marks on the mud guard to make sure finished wall is between 51mm and 76mm from centreline of inlet pipe.

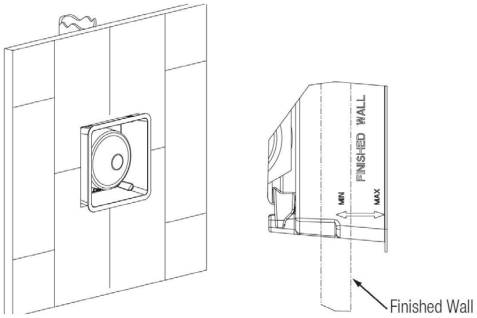

2. Remove mud guard and discard.

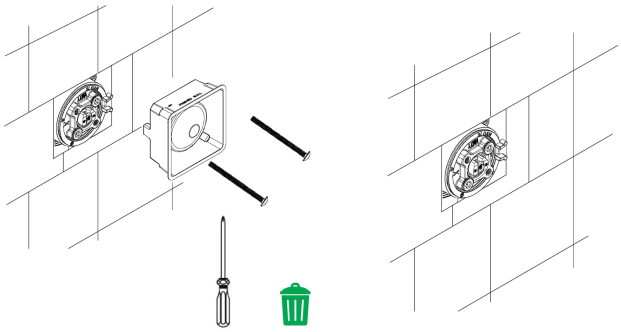

Continue to next page.

Disclaimer: Specification subject to change without prior notice
**Image is for illustration purposes only.*

Picture for illustration purposes only

3. Purge Plumbing System

Ensure TruFlush Flushometer is in the closed position prior to opening water main valve to supply and pressurise plumbing system.

1. Ensure activation assembly is turned fully clockwise. If not, use the activation assembly adjustment tool (supplied) to turn it fully closed.

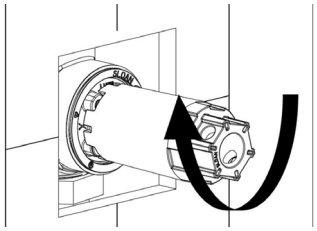

2. Push the plunger screw in the centre to relieve pressure inside the flushometer.

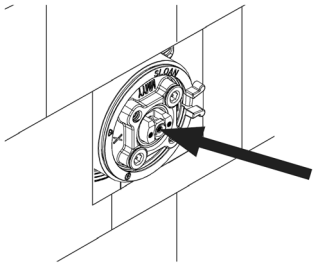

3. Push the activation assembly until fully seated.

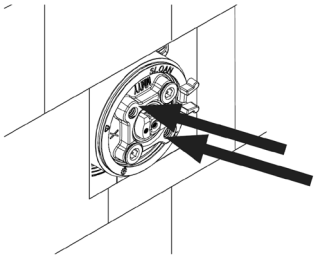

4. Squeeze and then pull the safety ring out. **Do not discard safety clip.**

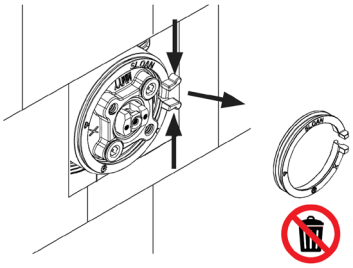

5. Use activation assembly screws (supplied) to pull the activation assembly out with the piston and conical spring.

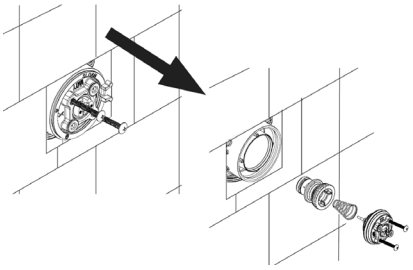

6. Keep the piston and conical spring aside. **DO NOT DISCARD** and reinstall activation assembly and the safety clip.

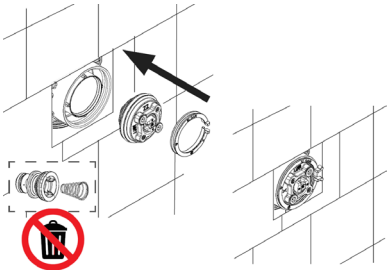

7. Using the adjustment tool, turn the activation assembly anti-clockwise **slowly** to open the water flow to flush the supply lines clean of air and debris. Careful not to overflow the fixture. After supply lines are cleared, turn the activation assembly clockwise to completely shut off the flow of water.

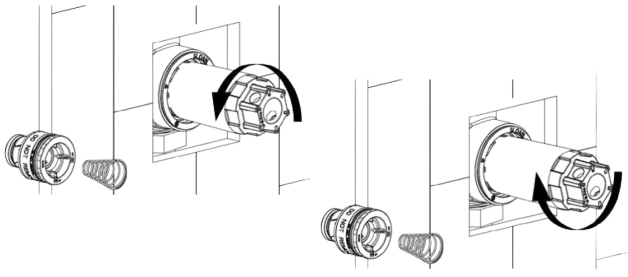

8. Remove the activation assembly using the activation assembly screw. Repeat steps 2, 3, 4, and 5.
9. If the valve was flushed before any of the above steps were followed, then wash the piston thoroughly using clean water prior to installation.

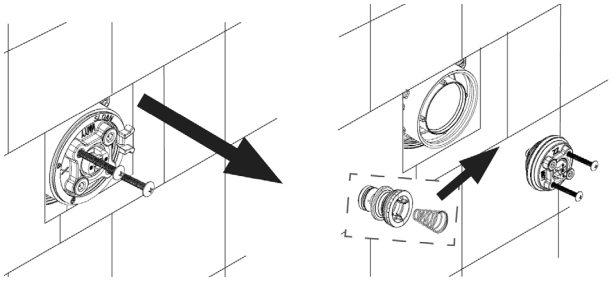

Continue to next page.

Disclaimer: Specification subject to change without prior notice
**Image is for illustration purposes only.*

Picture for illustration purposes only

3. Purge Plumbing System - Continued

10. Insert the clean piston and conical spring, then reinstall the activation assembly and safety clip.

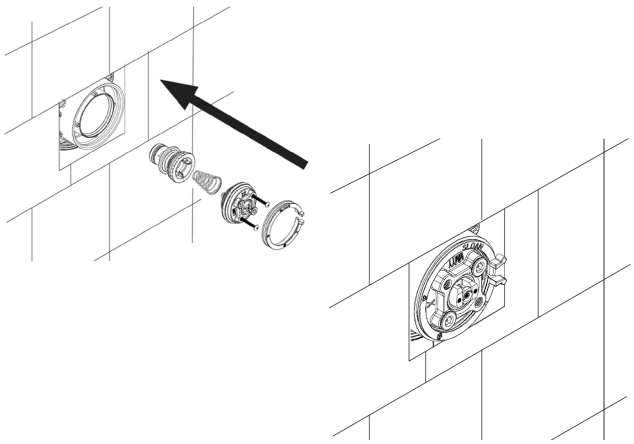

11. Use the adjustment tool to turn the activation assembly anti-clockwise **slowly** to open the flow of water.
12. Push the plunger to activate flush and adjust the flow as needed by rotating the activation assembly (clockwise to reduce flow and anti clockwise to increase the flow).
    Note: Make sure the are no leakages after assembly.

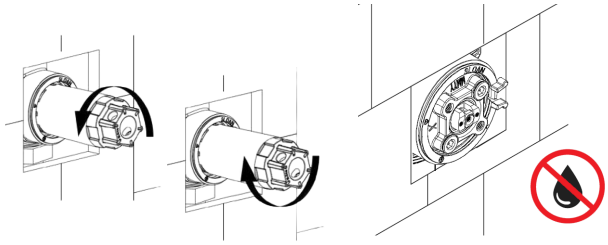

IMPORTANT

- The activation assembly should never be opened to the point where the flow from the valve exceeds the flow capability of the fixture. In the event of a flushometer failure, the fixture must be able to accommodate a continuous flow from the valve.
- The Flushometer is engineered for quiet operation. Excessive water flow creates noise, while too little water flow may not satisfy the needs of the fixture. Proper adjustment is made when plumbing fixture is cleansed after each flush without splashing water out from the lip and quiet flushing cycle is achieved.
- The Flushometer must be installed as per AS-3500, the Australian plumbing code and any other local and applicable codes.

Disclaimer: Specification subject to change without prior notice
**Image is for illustration purposes only.*

'TruFlush' Dual-Flushometers Installation Instructions

Product Codes: TRF42024 | TRF42036

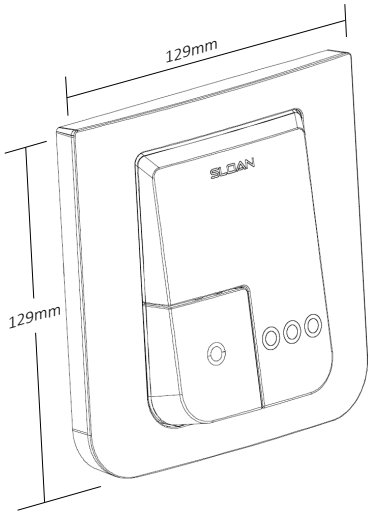

Wall opening measurements:

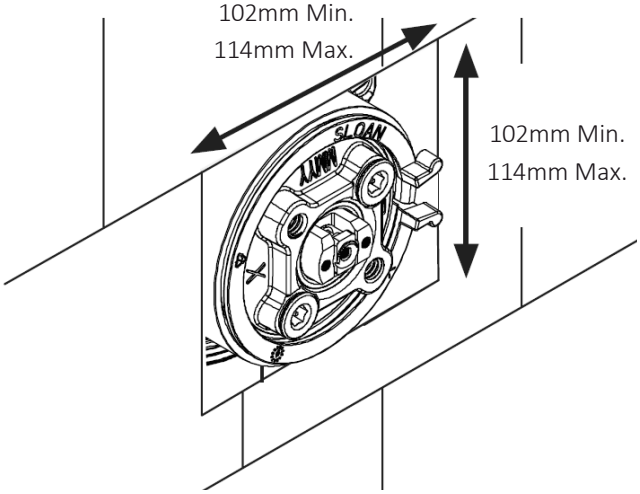

Items included plus an Installation Manual

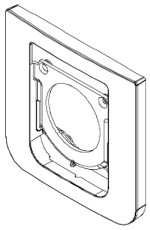

1 x Wall plate

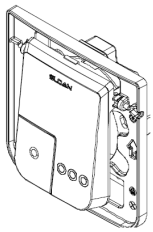

1 x Button and bracket assembly

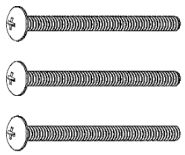

3 x #10-32 x 2-1/2 screws to secure bracket to valve



2 x #8-32 x 7/8 screws to secure plate to valve



M3 screws with nylon patch coating (M3x16, M3x25, M3x34) for plunger



1 x Allen key



1 x Depth setting tool

Wall Opening Measurements	***(mm)***
Min. wall plate opening	102 x 102
Max. wall plate opening	114 x 114

Prior to Installation

- Wall must be finished with complete valve assembly installed - see valve assembly installation instruction
- Mud guard is provided and must accompany valve for proper installation
- Mud guard is removed once wall is finished

Tools required for installation

- Phillips screwdriver
- 5/64" Allen key (supplied)
- Wall plate depth setting tool (supplied)

(03) 9399 8444
sales@magspp.com.au
www.magspp.com.au

Disclaimer: Specification subject to change without prior notice
**Image is for illustration purposes only.*

'TruFlush' Dual-Flushometers Installation Instructions

Picture for illustration purposes only

1. Insert the Allen key in the hole at the bottom of the Wall Plate Assembly and push it to snap open the button and then lift the button by 90° until button locks in place.

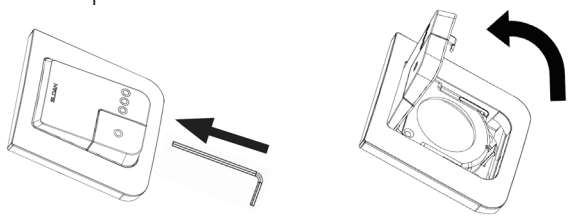

2. Remove the Wall Plate by tilting it up from the bottom and then pulling it out.

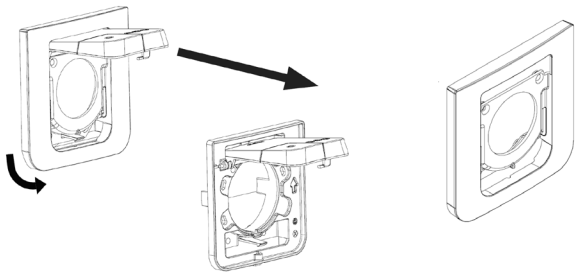

3. Mount the Button and Bracket Assembly to valve and secure it using the Bracket to Valve Screws (supplied).

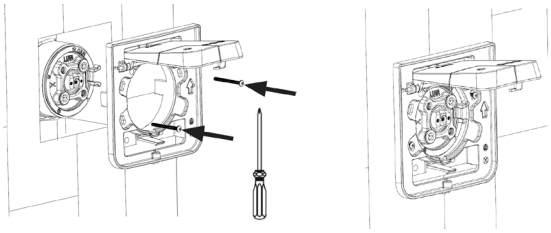

4. Mount the Wall Plate on the black wall bracket and secure it using the Plate to Valve Screws (supplied).

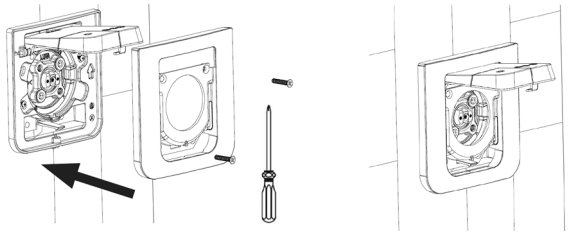

5. Choose one of the three length Plunger Screws (supplied) and thread into plunger. If the plunger starts rotating, **STOP**. This means the screws have reached the bottom of the hole. Over-tightening the screws will cause damage to the plunger. Try the next shorter screw size (supplied) to finish the adjustment.

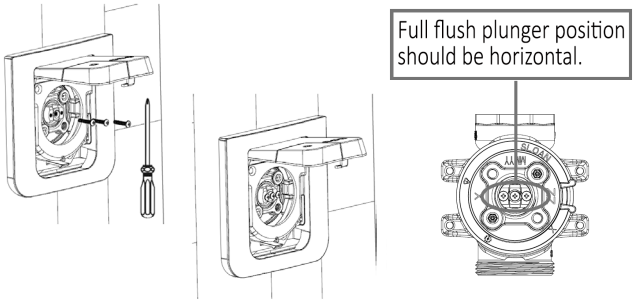

6. Using the Wall Plate Depth Setting Tool (supplied), adjust depth of plunger screws until screws touch depth guide. Use provided alternate length screws if necessary.

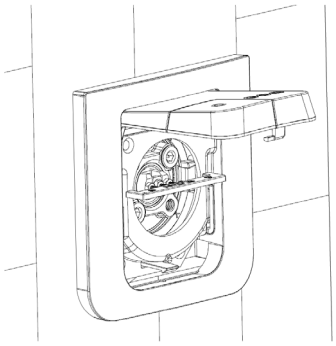

7. Rotate the button 90° back to lock it in place.

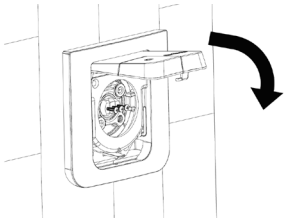

8. Test flush by pushing button. Make sure that button is not pushing the screws when not being pressed.

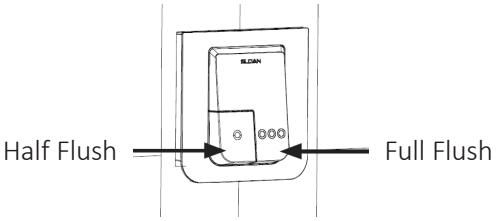

Disclaimer: Specification subject to change without prior notice
**Image is for illustration purposes only.*

Flushometer does not function (no water/flush)

A. Ensure water supply to valve is turned on.
B. Shut off sleeve is in closed position. Turn counter-clockwise to open water flow.
C. Ensure activation assembly screws are aligned horizontally.
D. Plunger screws are not adjusted properly. Adjust screws using depth guide tool.

Volume of water is not sufficient to evacuate the bowl

A. Shut off sleeve is not open wide enough. Adjust shut off sleeve for desired delivery of water volume.
B. Urinal piston parts installed in a closet flushometer. Replace piston with proper closet piston (6/3 Lpf or 4-4.5/2-2.5 Lpf).
C. Water supply volume or pressure is inadequate (low). If the fixture does not siphon or evacuate the bowl, steps must be taken to increase the water supply pressure and/or volume. Contact the fixture manufacturer for minimum water supply requirements of the fixture.
D. Full flush plunger screws (2 outer screws) are not adjusted to the same depth as half flush plunger screw (centre screw). Adjust screws using depth guide.

Flushometer closes off immediately

A. Urinal piston parts installed in a closet flushometer. Replace piston with proper closet piston (6/3 Lpf or 4-4.5/2-2.5 Lpf).
B. Piston lip seal may be damaged or worn. Replace with new correct Lpf piston.
C. Plunger screw not set properly. Adjust screw using depth guide.

Length of flush is too short (Short Flush)

A. Incorrect piston is installed in flushometer; for instance, urinal assembly inside a closet flushometer, or high efficiency assembly inside a higher consumption fixture. Determine the flush volume required by the fixture and replace with proper Lpf piston. Use valve label and marking on fixture for reference.
B. Piston lip seal may be damaged or worn. Replace with new correct Lpf piston.
C. Plunger screw is not adjusted properly. Adjust screw using depth guide.

Length of flush is too long (Long Flush) or continuous

A. Metering bypass hole in piston is clogged. Remove the piston from valve and wash under clean running water. Do not attempt to remove filter screen. Replace piston if cleaning does not correct the problem.
B. Supply line water pressure has dropped and is not sufficient to close the valve. Close shut off sleeve until pressure is restored.
C. Piston is damaged. Replaced with new proper Lpf piston.
D. Incorrect piston is installed in flushometer; for instance, closet assembly inside a urinal flushometer. Determine the flush volume required by the fixture and replace with proper Lpf piston. Use valve label and marking on fixture for reference.

Chirping noise is heard at start or end of flush

A. Reduce flow pressure by turning shut off sleeve clockwise.

Valve leaks through Aspirator when activated

A. Debris between the umbrella valve and the retainer. Blow air on the aspirator. If this does not correct the problem, remove retainer with 5 mm Allen Key (not included) and wash it under clean running water. Replace aspirator if cleaning does not correct the problem.
B. Loose Retainer. Hand tight retainer with 5 mm Allen Key (not included). Do not over tighten. Replace aspirator if this does not correct the problem.

Care and Maintenance + Warranty

DO NOT use abrasive or chemical cleaners (including chlorine bleach) to clean Flushometers that may dull the luster and attack the chrome or special decorative finishes. Use ONLY mild soap and water, then wipe dry with clean cloth. If using a cleaner in a spray bottle, DO NOT spray directly onto the Flushometer, instead spray cleaner into a clean cloth and then wipe down the Flushometer. While cleaning the bathroom tile, protect the Flushometer from any splattering off cleaner. Acids and cleaning fluids will discolor or remove plating.

Refer to MAG Limited Warranty via website. Insure that the product is installed as per AS-3500, the Australian plumbing code and any other local and applicable codes.

Disclaimer: Specification subject to change without prior notice
**Image is for illustration purposes only.*