'TruFlush' Sensor Dual-Flushometers Installation Instructions

Product Codes: TRF428024 | TRF428036

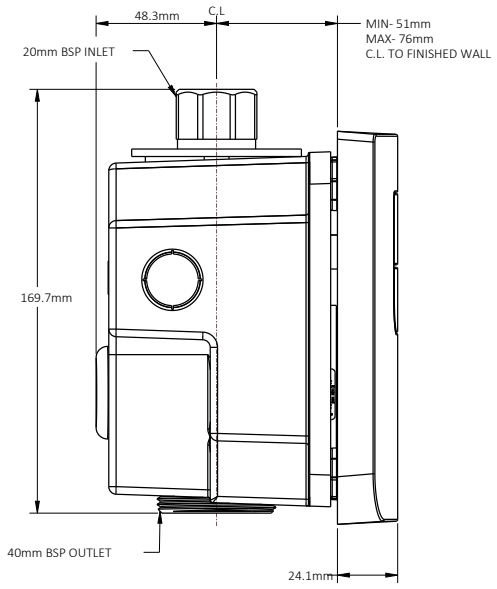

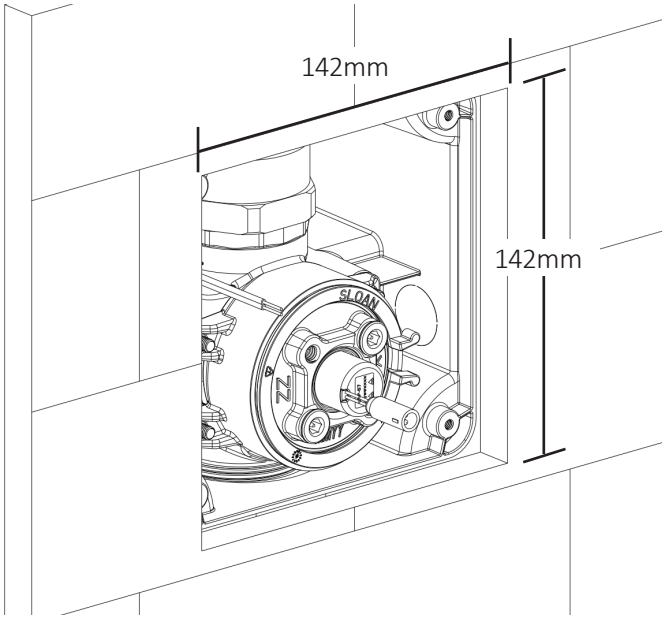

Wall Opening Measurements	(mm)
Wall plate opening	142 x 142

Items included plus an Installation Manual

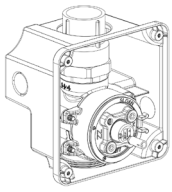

1 x Flushometer assembly

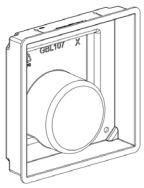

1 x Mud guard

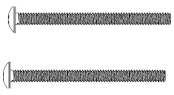

2 x #8-32 x 2" screws to secure the mud guard

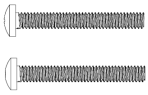

2 x 1/4"-20x2" screws to remove activation assembly

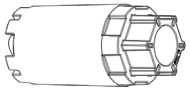

1 x Activation assembly adjustment tool

Tools Required for Installation

- Phillips screwdriver
- Activation assembly adjustment tool (supplied)
- Leveler

Prior to Installation

The Flushometer must be installed as per AS-3500, the Australian plumbing code and any other local and applicable codes.

Note

- This valve is designed for new construction or where there is easily accessed plumbing for the fixture and the valve.
- This flushometer device can be installed in a 90mm stud wall.
- Distance from center of the valve (inlet or outlet pipe) to the finished surface of the wall can vary from 51-76 mm.
- Mud guard is provided and must accompany valve for proper installation
- Mud guard to be removed after the wall is finished.

(03) 9399 8444
sales@magspp.com.au
www.magspp.com.au

Disclaimer: Specification subject to change without prior notice

'TruFlush' Sensor Dual-Flushometers Installation Instructions

Rough-In: TRF428024 | TRF428036

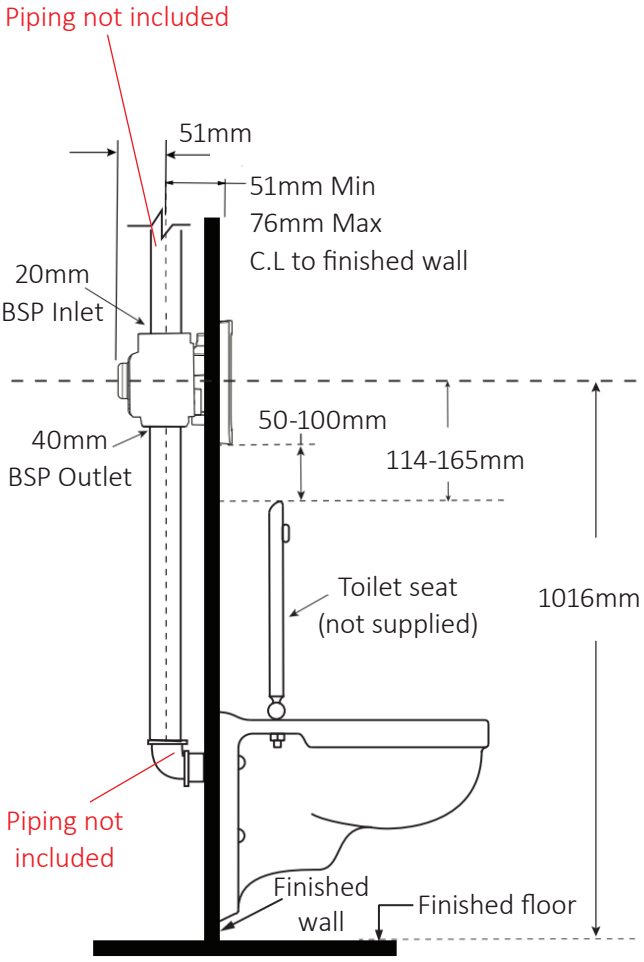

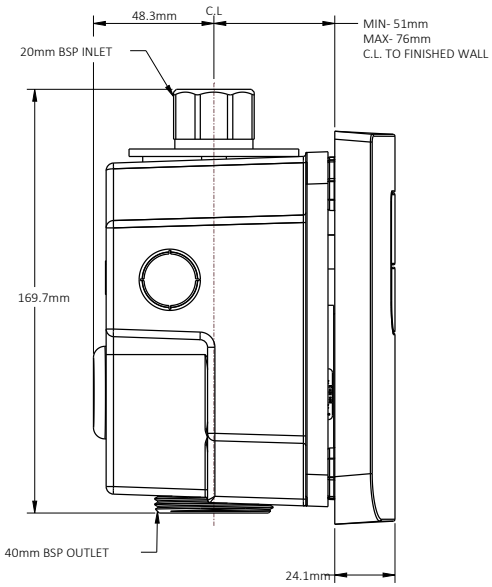

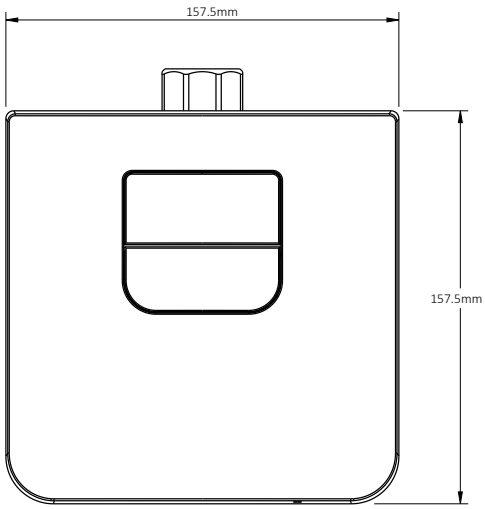

Notes:

- *Installation should comply to AS3500 - National Australian Plumbing Code and any other local and applicable codes.*
- *Image is for illustration purposes only.*

Note:

Sloan's Flushometers are designed to operate with 150 - 550kPa of flowing water pressure. The minimum pressure required to the valve is determined by the type of fixture selected. Consult fixture manufacturer for minimum pressure requirements. Most high efficiency water closets require a minimum flowing pressure of 172kPa. With the exception of the inlet, do not use pipe sealant. Do not use plumbing grease on valve components or couplings.

'TruFlush' Sensor Dual-Flushometers Installation Instructions

Picture for illustration purposes only

1. Connect Flushometer

1. Remove the mud guard and save for later use - **DO NOT DISCARD**.

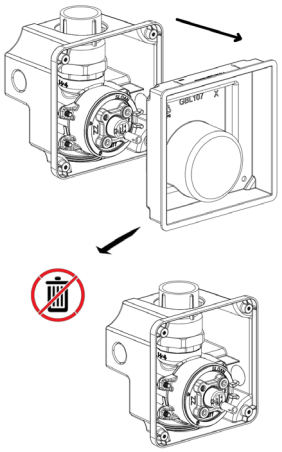

2. Connect the inlet pipe to the inlet of flushometer.

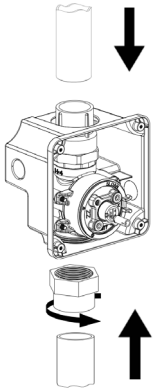

3. Reinstall mud guard to valve. Use the mud guard screws (supplied).

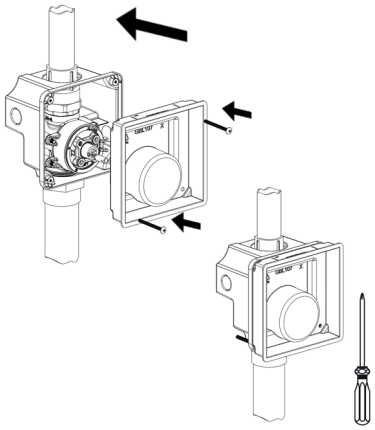

Important:
Make sure supply lines are flushed out. Debris can damage the valve or cause valve to malfunction. Do not continue the installation until supply lines are clear.

4. Use the leveler to make sure the Valve is level. Finish the wall. Use marks on mud guard to make sure finished wall is in between 51-76 mm from centerline of the inlet pipe.

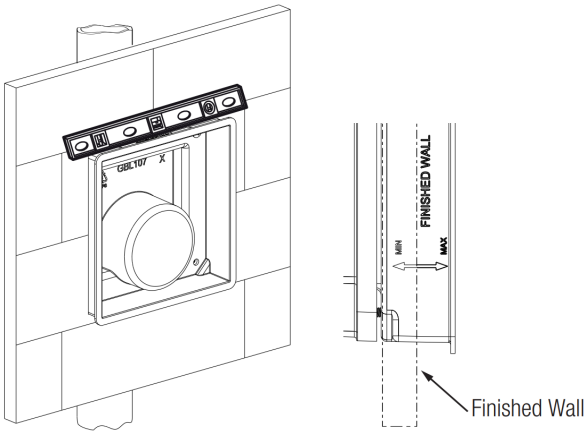

5. Only remove the mud guard when installing Wall Plate. Refer to wall plate installation manual.
Note: Removing the mud guard beforehand might result in damage to the solenoid from debris.

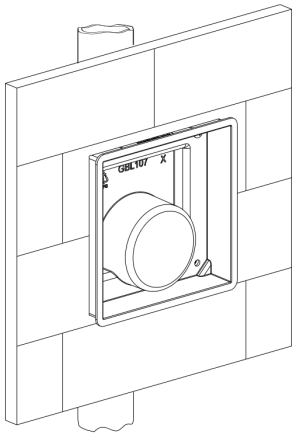

Continue to next page.

Disclaimer: Specification subject to change without prior notice

Picture for illustration purposes only

2. Connect Flushometer (Hardwire Connection)

1. Remove one of the knockout caps and route the transformer wire trough it inside wall box.
   Note: Use a conduit pipe to protect the transformer wire from damage during installation.

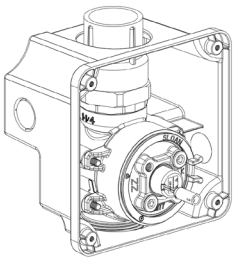

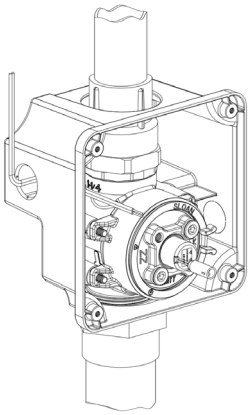

2. Finish the wall as instructed on the previous page (point 4 and 5).

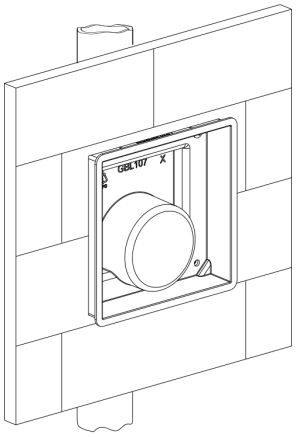

Important:

Transformer not provided, but can be purchased separately. It is crucial that the transformer output voltage must be 6VAC for the unit to function properly.

Disclaimer: Specification subject to change without prior notice

'TruFlush' Sensor Dual-Flushometers Installation Instructions

Product Codes: TRF428024 | TRF428036

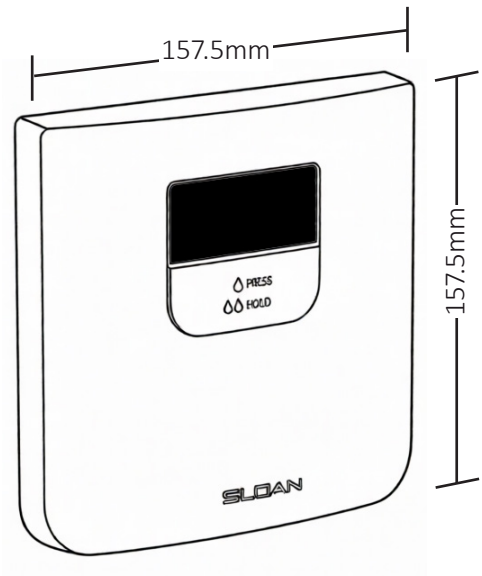

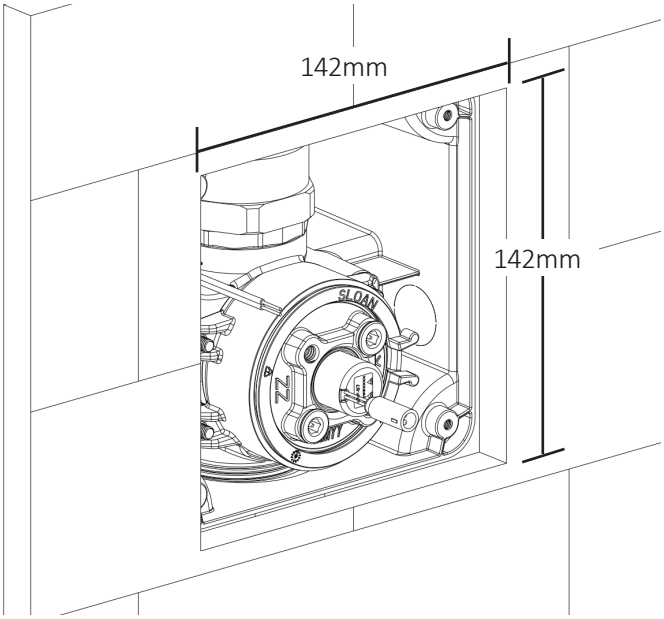

Items included plus an Installation Manual

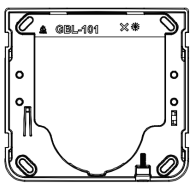

1 x Wall bracket

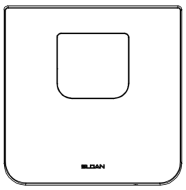

1 x Wall plate

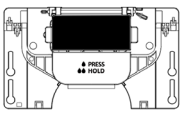

1 x PCB Assembly



1 x Allen key

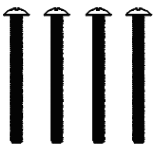

4 x #8-32 x 2 screws

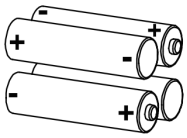

4 x Batteries

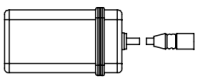

1 x Battery pack

Wall Opening Measurements	*(mm)*
Wall plate opening	142 x 142

Prior to Installation

- Wall must be finished with complete valve assembly installed - see valve assembly installation instruction
- Mud guard is provided and must accompany valve for proper installation
- Mud guard is removed once wall is finished

Tools required for installation

- Phillips screwdriver
- Flathead screwdriver
- Wire stripper tool
- Allen key (supplied)
- Activation assembly adjustment tool (supplied with the flushometer)

Disclaimer: Specification subject to change without prior notice

'TruFlush' Sensor Dual-Flushometers Installation Instructions

Picture for illustration purposes only

1. Remove the mudguard by unscrewing the two screws and discard the mudguard.
2. Mount the Wall Bracket to valve and secure it using the #8-32x2" screws.

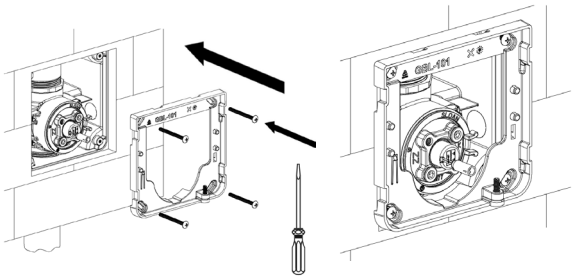

3. Open the battery pack by unscrewing the lid screw. Insert the (4) batteries into the battery pack as shown and close the lid by tightening the screw.
4. Insert the battery pack on the right side of valve as shown.

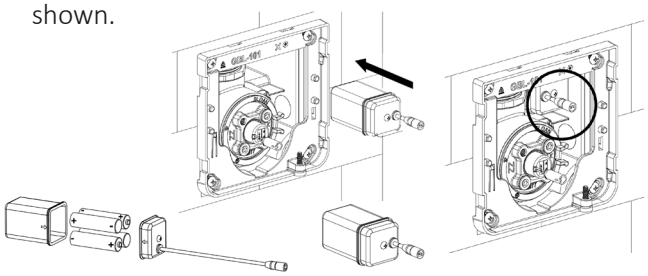

5. Connect the battery pack black connector to the black connector on the PCB Assembly. Connect Solenoid grey connector to the grey connector on the PCB Assembly. **Note:** Red LED will start blinking when power is connected to the PCB Assembly.

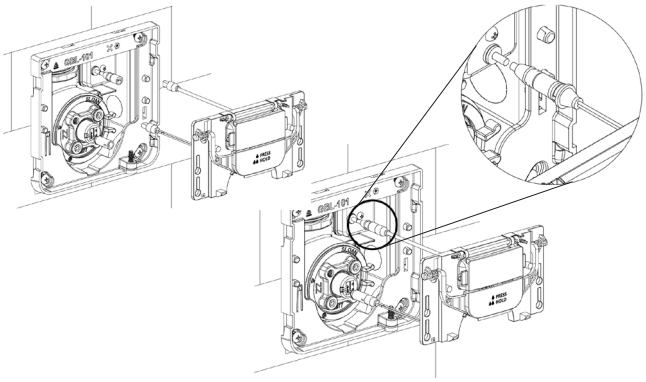

ONLY FOR HARDWIRE CONNECTION!

- Using a wire stripping tool, strip the ends of the transformer wire that was routed when installing the valve.
- Insert wire in blue terminal block and tighten terminal screws.
- Connect the terminal block to the PCB Assembly as shown.

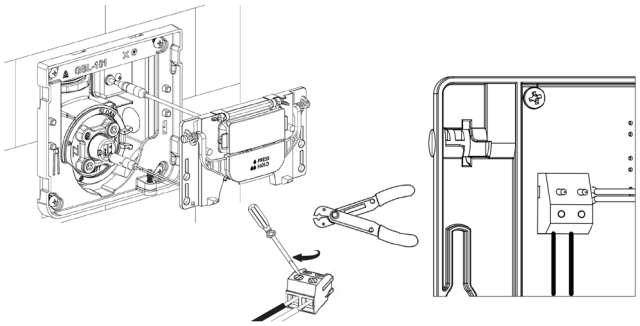

6. Align the 4 slots on the PCB Assembly with the mounting pegs on the Wall Bracket and slide the PCB Assembly all the way down.

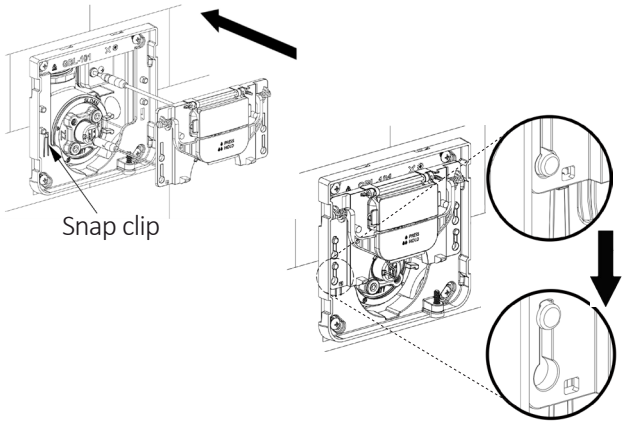

7. **Sensor Operation:** After power is applied, the Sensor Module will perform its start-up routine for 3mins 30secs with LED blinking. **Important: During this time, stay clear of the area in front of the sensor for proper automatic calibration.**
Note: A 3secs long Red LED, followed by slow Red LED blinking in the sensor window indicated the sensor is in the start-up mode. There will be 2 Red LED pulses. Each 2secs long in the sensor window, to indicate the start-up routine is complete. After the start-up routine is complete, in the first 10mins of operation, a visible Red LED flashes in the sensor window when a user is detected.
Sensing time for half flush is <1min, and for full flush is >1min. Button press time for half flush is <1sec, and for full flush is >1sec.

Continue to next page.

Disclaimer: Specification subject to change without prior notice

'TruFlush' Sensor Dual-Flushometers Installation Instructions

Picture for illustration purposes only

Install Wall Assembly Continued

8. Disconnect the Solenoid connector and lift the button as shown. Use the adjusting tool to turn the activation assembly clockwise (to lessen the flow) or anticlockwise (to increase the flow).
9. Reconnect the Solenoid and check the flow by flushing. Repeat as needed.

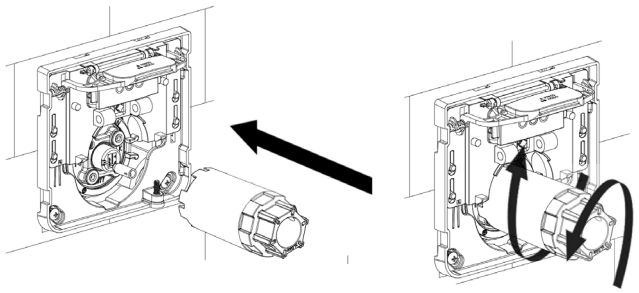

10. Make sure the retaining screw is fully tightened. Slide the PCB Assembly all the way up and align the wall plate cutout with the PCB Assembly as shown.
11. Push the wall plate all the way in then slide the wall plate down. Use the Allen key to unscrew the retaining screw until it touches the wall plate. Make sure the wall plate is completely fixed.
    Note: Do not unscrew anymore once the retaining screw touches the wall plate.

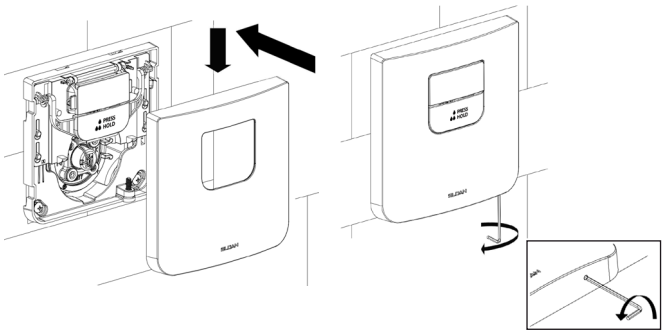

Important:

The flushometer is engineered for quiet operation. Excessive water flow creates noise, while insufficient water flow may fail to meet the requirements of the fixture. Proper adjustment is achieved when plumbing fixture is cleansed after each flush without water splashing. The activation assembly should never be opened to the point where the flow from the valve exceeds fixture's flow capacity. In the event of a valve failure, the fixture must be able to accommodate.

Additional Note for 4/2 Lpf Flushometers and Replacement Kits:

Sloan 4/2 Lpf ultra-high-efficiency flushometers meet all applicable standards and requirements. However, due to low flush volumes, it is imperative that they only be used in conjunction with toilet pans and drain line systems designed to operate with adequate flow rates and volumes in order to effectively eliminate waste and discharge it out of the building. It is the responsibility of the user to ensure both of these conditions are met. Failure to do so may affect system performance. Sloan 4/2 Lpf diaphragm and piston kits are designed as replacement parts for Sloan 4/2 Lpf flushometers only. They are not intended to be used as a means to reduce water consumption in flushometers with higher flush volumes.

Care and Maintenance

DO NOT use abrasive or chemical cleaners (including chlorine bleach) to clean Flushometers that may dull the luster and attack the chrome or special decorative finishes. Use ONLY mild soap and water, then wipe dry with clean cloth. If using a cleaner in a spray bottle, DO NOT spray directly onto the Flushometer, instead spray cleaner into a clean cloth and then wipe down the Flushometer. While cleaning the bathroom tile, protect the Flushometer from any splattering off cleaner. Acids and cleaning fluids will discolor or remove plating.

'TruFlush' Sensor Dual-Flushometers Troubleshooting Guide

Sensor LED flashes continuously only when user steps within range.

A. Unit is in start-up mode; no problem. This feature is active for the first ten (10) minutes of operation.

Red light blinks four (4) times when user steps within range.

A. "AA" Batteries depleted; replace batteries, lithium or alkaline. Ensure batteries are installed with proper polarity (+) and (-). **Do not mix** old and new batteries or different types.
B. (Hardwired) Battery Box not connected; connect Battery Box to Sensor Assembly.

Valve does not flush; sensor not picking up user.

A. Verify a urinal Sensor is not used on a closet Valve. Model is marked on rear of Sensor.
B. Range is too short; recalibrate range. Restart the Sensor by holding the Override Button in for 25 seconds, then release the Override Button and step away for one (1) minute; with power connected, this is considered a **Soft Reset**.
C. For **Hard Reset** of Sensor, remove all power connections (battery and hardwire) for one (1) minute. Reconnect power and step away from front of Sensor for 3½ minutes. Then test Sensor activation by standing in front of Sensor for ten (10) seconds, then step away and wait for flush. Test push button.

Valve does not flush; sensor picking up opposite wall or surface, or only flushes when someone walks by. Red light flashes continuously for first 10 minutes even with no one in front of the sensor.

A. Verify a closet Sensor is not used on a urinal Valve. Model is marked on rear of Sensor.
B. Range is too long; recalibrate range. Restart the Sensor by holding the Override Button in for 25 seconds, then release the Override Button and step away for one (1) minute; with power connected, this is considered a Soft Reset.
C. If range needs to be manually shortened, reset the Sensor (follow Step B) and stand in front of the Sensor at desired range distance for one (1) minute.
D. For **Hard Reset** of Sensor, remove all power connections (battery and hardwire) for one (1) minute. Reconnect power and step away from front of Sensor for 3½ minutes. Then test Sensor activation by standing in front of Sensor for ten (10) seconds, then step away and wait for flush. Test push button.

Valve does not flush even after sensor recalibration.

A. Ensure water supply to Valve is turned on.
B. Activation Assembly sleeve is in closed position. Turn counter-clockwise to open water flow. Note: there is approximately 1/8-turn (45°) of free spinning as the Activation Assembly engages the Shut Off Sleeve between opening and closing the Valve.
C. Solenoid wire disconnected from Sensor. Ensure Solenoid wires are intact and Solenoid plug is connected properly.
D. "AA" Batteries depleted; replace batteries, lithium or alkaline. Ensure batteries are installed with proper polarity (+) and (-). **Do not mix** old and new batteries or different types.
E. Sensor Assembly malfunctioned. Disconnect power for one (1) minute, reconnect power, and check for start-up operation (flashing red LED). See **Hard Reset** of Sensor (above).
F. Check Solenoid for activation (clicking noise when pressing Sensor Override Button). If no clicks are heard, then contact Technical Support.

Valve does not shut off.

A. Ensure Solenoid is connected to Sensor.
B. Supply line water pressure has dropped and is not sufficient to close the Valve. Close Activation Assembly until pressure is restored.
C. Piston Filter Screen is clogged, Piston is damaged, or large debris stuck behind Piston. Turn off water at Shut Off Sleeve, release pressure, remove Safety Collar and Activation Assembly. Remove Piston and check inside Valve for large debris. **Do not attempt to remove Piston filter screen.** Replace Piston if damaged or cleaning does not correct the problem.

Continue to next page.

Disclaimer: Specification subject to change without prior notice

Too much water to fixture.

A. Excessive flow pressure. Readjust Activation Assembly by turning clockwise to decrease flow pressure.
B. Long Flush. Worn Piston; replace with new proper Lpf Piston.
C. Wrong model installed; i.e., 6.0 Lpf model installed on 1.9 Lpf or 1.0 Lpf urinal fixture. Replace with proper model per guide.

Not enough water to fixture.

A. Insufficient flow pressure. Readjust Activation Assembly by turning counter-clockwise to increase flow pressure.
B. Water supply pressure is inadequate (low). Increase the water supply pressure. Contact the fixture manufacturer for minimum water supply requirements of the fixture.
C. Wrong model installed; i.e., 1.9 Lpf urinal installed on a 6.0 Lpf closet fixture. Replace with proper model.
D. Check lip seal for wear. Replace Piston if lip seal is worn or twisted.

Chirping noise is heard at start or end of flush.

A. Caused by air purging from the system inside the Valve Assembly. Noise will subside with several flushes or within a day.

Valve leaks through aspirator when activated.

A. Debris between the umbrella Valve and the Retainer. Blow air on the Aspirator. If this does not correct the problem, remove Retainer with 5 mm Allen Key (not included) and wash it under clean running water. Replace Aspirator if cleaning does not correct the problem.
B. Loose Retainer. Hand tight Retainer with 5 mm Allen Key (not included). Do not overtighten. Replace Aspirator if this does not correct the problem.

Care and Maintenance

DO NOT use abrasive or chemical cleaners (including chlorine bleach) to clean Flushometers that may dull the luster and attack the chrome or special decorative finishes. Use ONLY mild soap and water, then wipe dry with clean cloth. If using a cleaner in a spray bottle, DO NOT spray directly onto the Flushometer, instead spray cleaner into a clean cloth and then wipe down the Flushometer. While cleaning the bathroom tile, protect the Flushometer from any splattering off cleaner. Acids and cleaning fluids will discolor or remove plating.

Warranty

Refer to MAG Limited Warranty via website. Insure that the product is installed as per AS-3500, the Australian plumbing code and any other local and applicable codes.

Additional Note for 4/2 Lpf Flushometers and Replacement Kits:

Sloan 4/2 Lpf ultra-high-efficiency flushometers meet all applicable standards and requirements. However, due to low flush volumes, it is imperative that they only be used in conjunction with toilet pans and drain line systems designed to operate with adequate flow rates and volumes in order to effectively eliminate waste and discharge it out of the building. It is the responsibility of the user to ensure both of these conditions are met. Failure to do so may affect system performance. Sloan 4/2 Lpf diaphragm and piston kits are designed as replacement parts for Sloan 4/2 Lpf flushometers only. They are not intended to be used as a means to reduce water consumption in flushometers with higher flush volumes.