Sloan ‘TruFlush’ Sensor Dual-Flushometers

Product Codes: TRF428024 | TRF428036

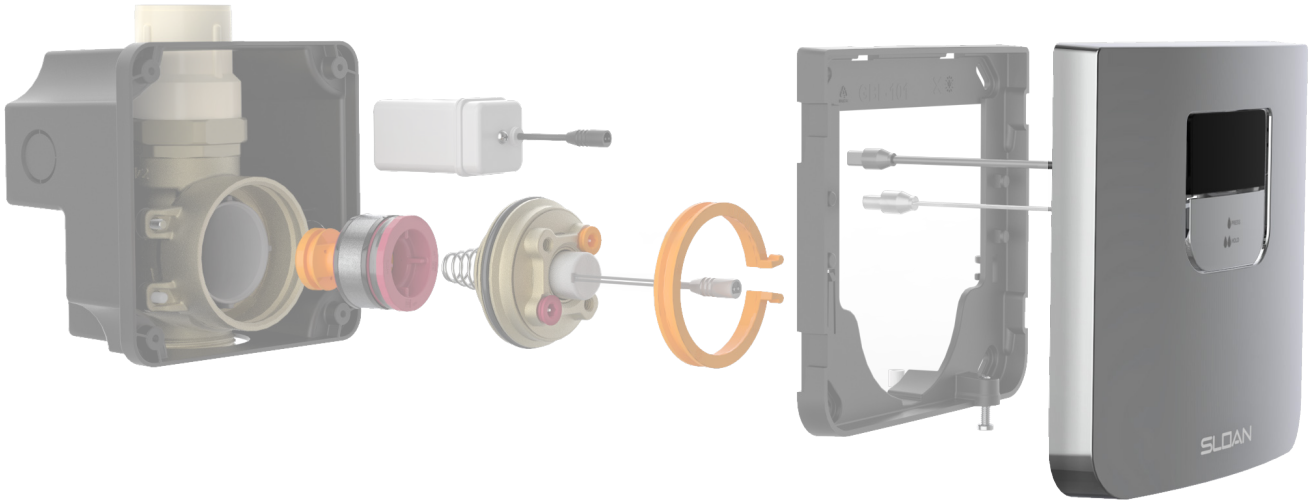

Product Overview

Sloan ‘TruFlush’ Sensor Dual-Flushometer is compact, concealed, attractive, accurate, and reliable. It is simple to install and easy to operate. Operates on a 20mm ID standard mains water supply, a Sloan ‘TruFlush’ Sensor Dual-Flushometer is ideal for any new construction and existing plumbing systems as it fits neatly into a 90mm stud wall. Once installed, all the servicing can be done through the front access wall panel, which is nearly 70% smaller than the industry standard. Engineered for high-traffic efficiency, it features a self-adaptive infrared sensor with lobular sensing fields for precise detection and an Electronic Courtesy Flush® override button, delivering a powerful, thorough flush ready to repeat in just 5 seconds. The ‘TruFlush’ Sensor Dual-Flushometer includes an integrated control stop, with an all-vertical, in-line, rough-in that allows the installer to bring the plumbing to the device. It is perfect for any restroom application.

Picture for illustration purposes only.

Suitable Market Application

- Health and aged care facilities (e.g.: hospitals, nursing homes, senior living, disabled facilities)
- Public buildings (e.g.: stadiums, entertainment venues, airports, stations, community facilities, recreational centres)
- Multi-storey residential apartments
- Schools and universities
- Institutional buildings (e.g.: child care facilities, dormitories, police stations, gymnasiums and sport facilities, office buildings)
- Commercial buildings (e.g.: hotels, shopping centres, restaurants)

WaterMark
AS 1172.2:2014
Lic No: WM-74580

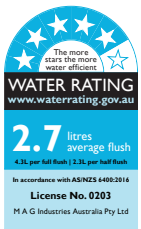

TRF428024

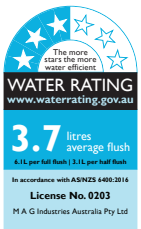

TRF428036

(03) 9399 8444
sales@magspp.com.au
www.magspp.com.au

Disclaimer: Specification subject to change without prior notice.

Sloan ‘TruFlush’ Sensor Dual-Flushometers

Product Codes: TRF428024 | TRF428036



How the Sensor Dual-Flushometer Works

The ‘TruFlush’ Sensor Dual-Flushometer features a self-adaptive infrared sensor with lobular sensing fields for accurate target detection. When a user stands in front of the sensor eye between 8 and 30 seconds, it delivers a half flush. If the sensing duration exceeds 30 seconds, it delivers a full-flush. If using The Electronic Courtesy Flush® manual override button, press it for less than one second for a half flush; press it for longer than one second for a full flush. The system is ready to re-flush via the override button within 5 seconds.

Recommended Specification

Flushometer system shall be concealed with front access wall plate smaller than 178mm x 178m and shall have integrated control stop.

Details and Specifications

- Power type: Battery
- Four (4) Size AA batteries included
- Battery life: 5 years (depends on actual usage and restroom conditions)
- Override: Electrical
- Arming delay: 8 seconds
- Flush delay: 3 seconds
- Sensor range: 559–1,168mm
- Front angle: 19° || 9.5° right and left from centre (front lens vision)
- Downwards angle: 20° (downwards spread)
- Control circuit: 6 VDC Input/Solid State
- Solenoid Operator: 6 VAC
- Hardwired transformer sold separately

Product code	*TRF428024*	*TRF428036*
Inlet diameter	20mm ID	
Operating pressure (flowing)*	150 kPa to 550 kPa	
Outlet diameter	40mm	
WELS Rating	5 Star	3 Star
Full flush volume (Lpf)	4.3	6.1
Half flush volume (Lpf)	2.3	3.1
Average flush volume (Lpf)	2.7	3.7
Wall plate finish	Polished Chrome	
Valve	Piston	
Bypass	Filtered	
Fixture Type	Water Closet (WC)	

**Specific fixtures may require greater minimum flowing pressure - consult manufacturer requirements.*

WaterMark
AS 1172.2:2014
Lic No: WM-74580

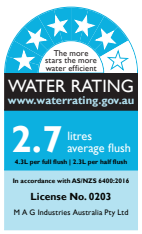

TRF428024

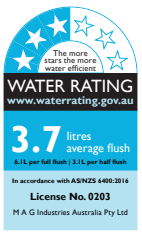

TRF428036

Disclaimer: Specification subject to change without prior notice.

Sloan ‘TruFlush’ Sensor Dual-Flushometers

Product Codes: TRF428024 | TRF428036

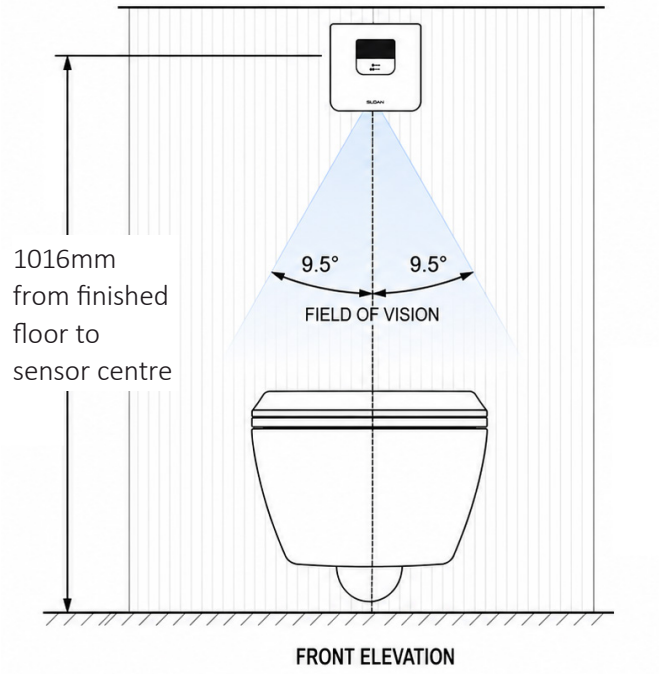

FRONT ELEVATION

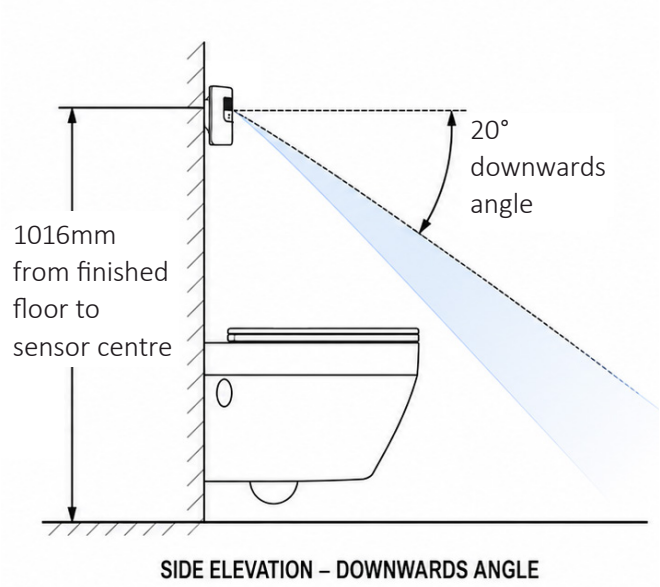

SIDE ELEVATION – DOWNWARDS ANGLE

Features and Benefits

- Operates on a 20mm ID standard mains water supply
- Compact body fits into a 90mm stud wall
- Compatible to be paired up with all major brands of toilet pans
- Performs with reclaimed/recycled water
- Front access wall plate requires no rear or top access
- Electronic Courtesy Flush® override button
- Re-flush ready within 5 seconds using the Electronic Courtesy Flush® override button
- Ability to hardwire with battery backup
- “Low Battery” Flashing LED
- Initial target detection indicator light (first 10 minutes)
- Self-adaptive infrared sensor with lobular sensing fields for accurate target detection
- Corrosion-resistant, heavy duty brass body
- Corrosion free plastic parts, does not allow any scaling or deposit
- Chrome plated, corrosion-resistant, vandal resistant metal wall plate
- Resistance to fading, oxidation, flaking and bubbling
- Piston color-coded by flush volume for easy identification
- Replaceable piston assembly accessible through front wall plate
- Piston with built in filter to ensure consistent, long-lasting performance
- Flood prevention feature limits flow to a trickle in wide open position
- Safety clip locks activation assembly to prevent access of internal components without shutting off water
- Concealed shut-off sleeve adjusts flow rate
- Fixed volume piston with filtered o-ring bypass
- Accurate flush volume with every flush
- Aspirator technology reduces noise post flushing
- AS 1428.1 (Design for access and mobility) compliant

Notes:

- *Installation should comply to AS3500 - National Australian Plumbing Code and any other local and applicable codes.*
- *Image is for illustration purposes only.*

Rough-In: TRF428024 | TRF428036

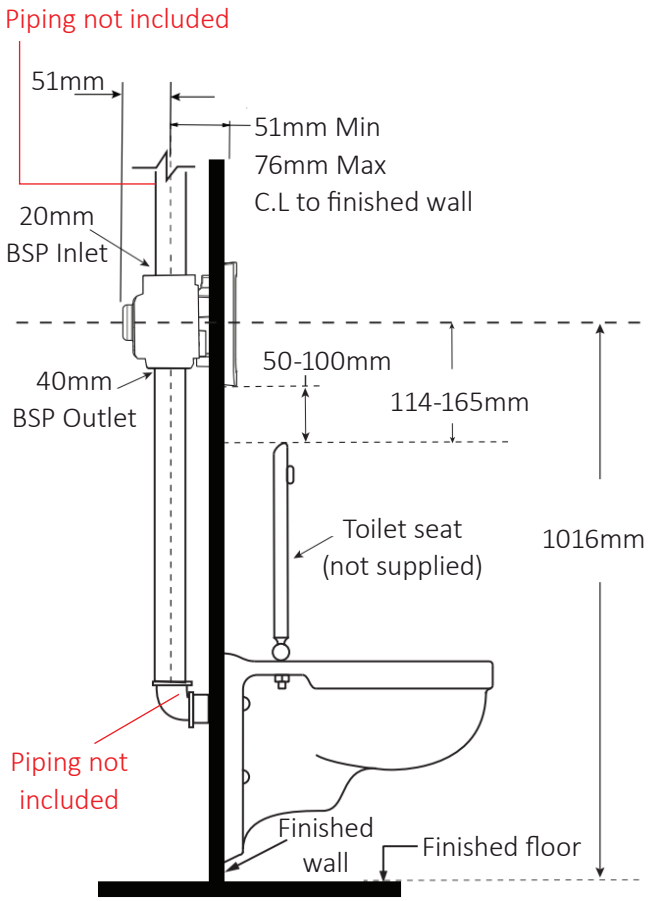



Notes:

- *Installation should comply to AS3500 - National Australian Plumbing Code and any other local and applicable codes.*
- *Image is for illustration purposes only.*

Disclaimer: Specification subject to change without prior notice

Sloan ‘TruFlush’ Sensor Dual-Flushometers

Product Codes: TRF428024 | TRF428036

Detailed View

Wall Box
Strong concealed wall box is made using flame retardant HDPE material that protects electronics and secures wall plate with mounting bracket.

Wall Bracket
The bracket is easy to install with only screws needed for mounting.

PCB Assembly
Sloan waterproof electronic PCB: self-adaptive infrared sensor with lobular sensing fields for accurate target detection and tactile Electronic Courtesy Flush® override button.

Battery Pack Housing
House four Alkaline AA-Size Batteries.

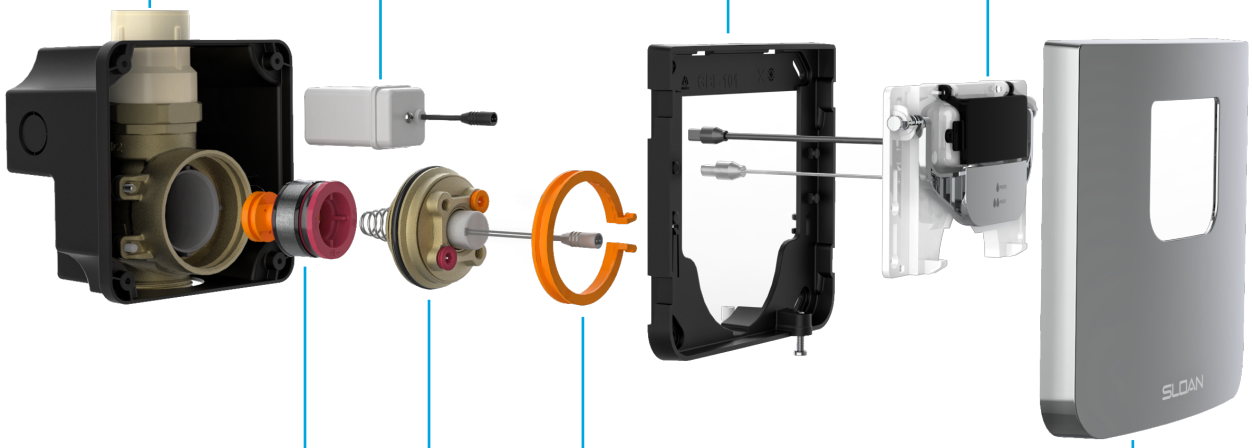

Piston
Sloan’s proven piston technology is the heart of the flushometer and accurately controls the flush volume. Enhanced filtration is designed for even the harshest water conditions.

Safety Clip
During maintenance and installation, the safety ring securely locks the internal components in place.

Wall Plate
The chrome-finished wall plate design is sleek, simple, vandal-resistant, and built to last. The front wall plate allows for quick and easy installation and maintenance.

Activation Assembly
The activation assembly is used to adjust the water flow rate and is easily accessible through the wall plate. The integrated aspirator reduces noise at shutoff.

Picture for illustration purposes only.

Disclaimer: Specification subject to change without prior notice.