Why you should choose Sloan ‘TruFlush’ Dual-Flushometer

Sloan ‘TruFlush’ Flushometer	In-wall Cistern Tank
✓ Fewer parts means fewer problems, with only 6 parts in Sloan ‘TruFlush’ Push-Button Dual-Flushometer and 8 parts in Sloan ‘TruFlush’ Electronic Dual-Flushometers helps facilitate easy servicing and maintenance of the product 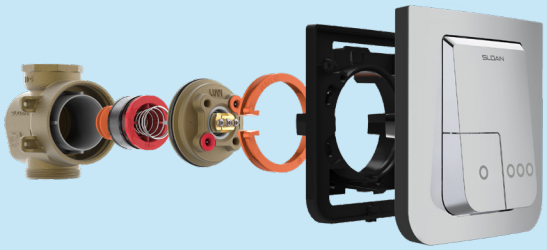 *Image above: TRF42024 | TRF42036*	• Too many internal parts makes service and maintenance of the product difficult. 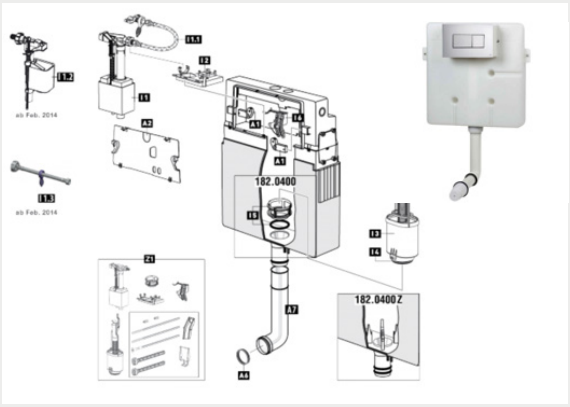
✓ No variation in flush volume, true flushometer	• Variation in every flush volume.
✓ Re-flush ready within 5 seconds	• It takes minimum 30-60 seconds to fill the tank after one flush. Big challenge in commercial toilets.
✓ Operates on a 20mm ID standard mains water supply and fits into a 75mm stud wall 	• N/A
✓ Ledge wall not required – TruFlush Flushometer will help gain more usable space in every restroom as it does not require a rear access nor a ledge wall to accommodate any cisterns. 	• It needs additional ledge wall to install the tank. It attracts additional cost, also eats up space. 

Continue to next page.

MAG SPECIALISED PLUMBING PRODUCTS
(03) 9399 8444
sales@magspp.com.au
www.magspp.com.au

Disclaimer: Specification subject to change without prior notice

Why you should choose Sloan ‘TruFlush’ Dual-Flushometer

✓ Flexibility of placing the wall plate 	• N/A 
✓ Space, Time and Cost savings - Installation and maintenance is simple, with the ability to shut off water and replace parts in minutes, all through the wall plate ✓ Easy to repair, one tool service 	• Difficult and costly maintenance – Concealed flush tanks or cisterns are difficult to service and maintains. As it is behind a tiled wall, there is no access to all internal parts. If a problem occurs with the cistern or needs replacement, it cannot be accessed and fixed easily.  
✓ Compatible to be paired up with all major brands of toilet pans	• N/A
✓ Performs with reclaimed/recycled water	• Compatibility issue with reclaimed/recycled water
✓ No storage of reclaimed/recycled water, no stink	• Stores 6L of water, leads to stink if not flushed for 48 hours.

Disclaimer: Specification subject to change without prior notice