Drinking Bubbler

Product Codes: DF240 | DF260

Installation Instructions:

- Ensure all water lines are flushed thoroughly of any impurities.
- Remove Drinking Blubbler from carton.
- Fix bubbler to 15mm BSP thread.
- Turn on water supply and check for leaks.
- This drinking bubbler has an adjustable water flow. To adjust, simply remove the cover screw from underneath the nozzle outlet (flat head screw). Using the provided allen key, adjust the grub screw inside the nozzle head.
- Once desired fountain height has been reached, replace cover screw and test.

Product Info

- Lead free brass material
- Adjustable water flow
- Rubber coated mouthguard
- Typical use: to provide cold water for drinking purposes

Specifications

Min. Pressure	150kPa
Max. Working Pressure	350kPa
Temperature range	0-50°C

DF240: Vertical Drinking Bubbler



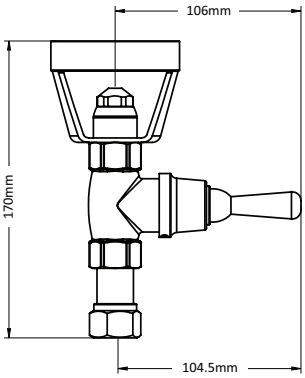

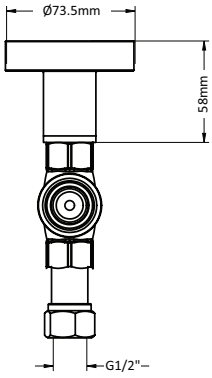

DF260: Horizontal Drinking Bubbler



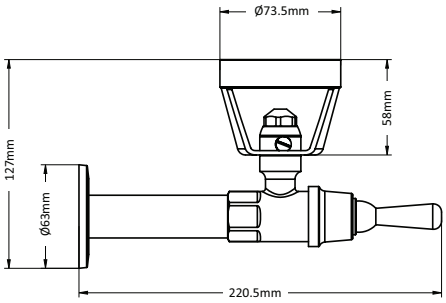

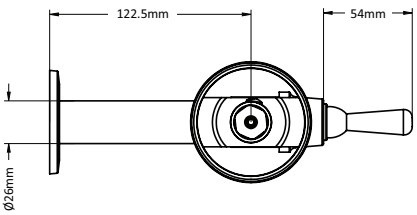

(03) 9399 8444
sales@magspp.com.au
www.magspp.com.au

Disclaimer: Specification subject to change without prior notice