MAG M x F Brass Pressure Relief Valves



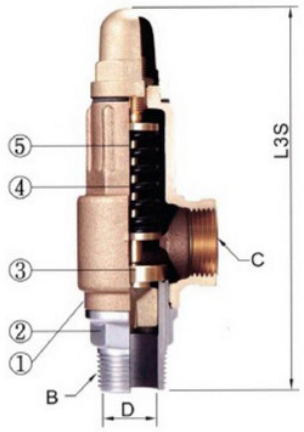

Product Code: PREL/SRL

Designed to automatically relieve pressure when it reaches a predefined limit.

Suitable to use with: Air, Water, Steam, Non-Corrosive Gas, Non-Corrosive Liquids.

Max Working Temp: -45°C to 185°C
Reduced Pressure Range: 300kPa – 1000kPa
Factory Preset: 1000 kPa

Product Info

#	Part	Material/Other Info
1	Main valve body	Cast bronze
2	Valve seat	Stainless steel
3	Disc	Forging brass
4	Spring	Steel or stainless steel
5	Stem	Brass
B	Inlet	Size depends on model
C	Outlet	Size depends on model
D	Valve seat orifice	Size depends on model
L35	Height	Size depends on model

Product Codes

Product Code	Product Description
PREL-15	15mm M x F Brass Pressure Relief Valve
PREL-20	20mm M x F Brass Pressure Relief Valve
PREL-25	25mm M x F Brass Pressure Relief Valve
PREL-32	32mm M x F Brass Pressure Relief Valve
PREL-40	40mm M x F Brass Pressure Relief Valve
PREL-50	50mm M x F Brass Pressure Relief Valve

Disclaimer: Specification subject to change without prior notice