Big Dipper® Grease Trap W200



Product Code: W-200-IS-E-AU

Products Overview

Big Dipper® Grease Trap W200 (W-200-IS-E-AU) is an automatic grease removal system with a grease retention capacity of 21.2kg. It is compact and low maintenance. Its patent pending Advanced Odour Protection prevents odours from escaping through the lid of the Big Dipper®.

Included as an Integral Part of the Unit

- 50mm inlet/outlet connections
- 1 rotating gear oleophilic/hydrophobic skimming wheel assembly for automatic grease/oil removal
- Flow control device
- Self-regulating electric immersion heater with thermostatic control
- 25mm vessel vent and Integral gas trap
- Digital controls for programmable operation
- Field-reversible motor assembly
- Field-reversible grease/oil sump outlet
- Quick-release stainless steel lid clamps
- Fully removable polymer lid with magnetic tensioners
- Internal polymer/stainless steel strainer basket for collecting coarse solids
- Polymer wiper blade unit
- Separate gasketed removable grease and oil collection container with carry handle and pouring spout

Features and Benefits

- Fully automatic self-cleaning cycle
- Traps and removes grease for easy disposal, protecting internal plumbing from clogging
- Capturing solid food particles and grease as they drain from your sinks, keeping them out of the sewer system
- User-friendly Digital Control interface and easy-to-operate controls
- Integrated Motor/Grease Outlet/Heater/Lid enables a fast, do-it-yourself unit operation reversal
- Constructed from corrosion resistant materials suitable for installation in most location
- Compact, space-efficient design
- Fit under or immediately beside most three-compartment, prep sinks or a pre-rinse station
- Patent Pending Advanced Odour Protection design locks in odours from grease and solids, keeping odours inside the tank
- Because it's not buried, it becomes an asset to be sold or moved if the end user's location changes
- Uses standard power outlet
- WSAA (Water Services Association of Australia) approved

Product Specifications

- Exterior: Stainless steel, bright finish injection moulded polymer
- Interior: Rotationally moulded Polyethylene
- Electrical: 240 Volts
- Flow Rating: 1.3L/sec
- Number of Skimming Wheels: 1
- Skimming Rate: 4.08Kg/hr
- Grease Retention Capacity: 21.2Kg
- Internal Solids Strainer Capacity: 7L
- Inlet/Outlet: 50mm

Suitable Application

Ideal for Cafes, Restaurants, Take-away Shops, Fish & Chip Shops, Bars, Hotels, Supermarkets, Shopping Centres, Hospitals, and School Cafeterias to protect plumbing from grease build-up.

MAG
SPECIALISED PLUMBING PRODUCTS

(03) 9399 8444
sales@magspp.com.au
www.magspp.com.au

Disclaimer: Specification subject to change without prior notice

Top View

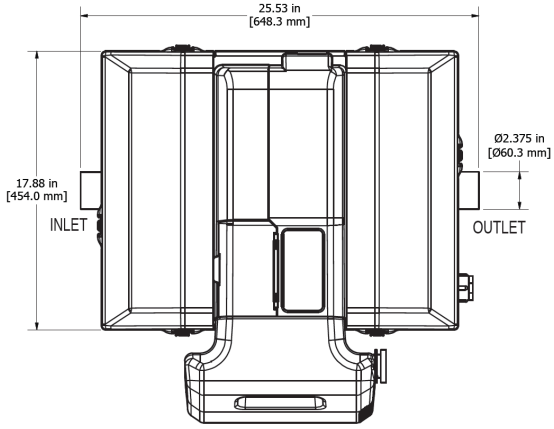

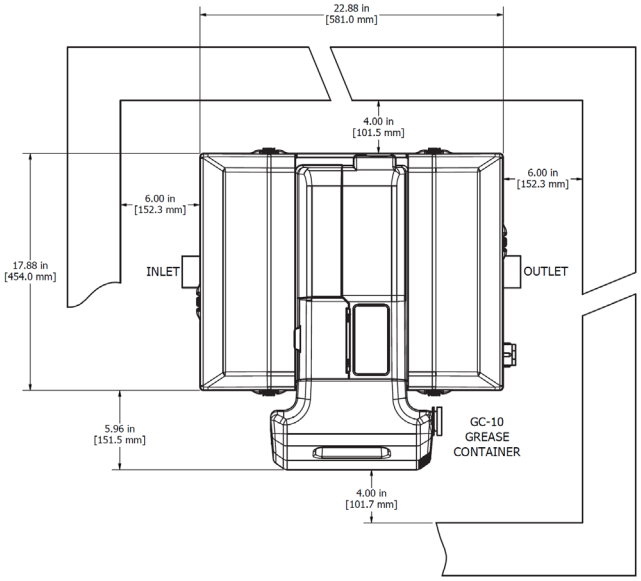

End View

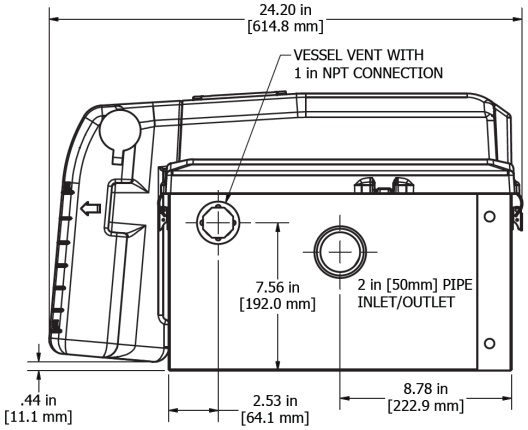

Side View

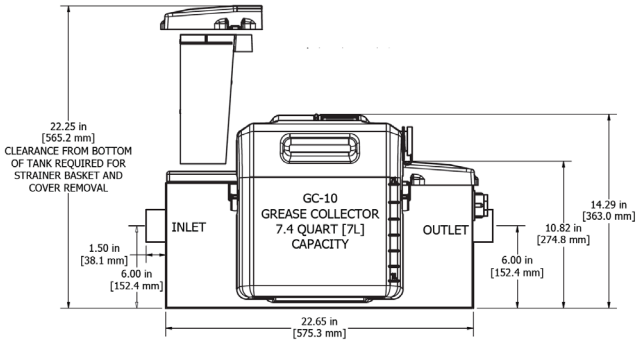

Installation Notes

1. Read the instruction manual thoroughly before installing/operating the system
2. Install unit allowing for the minimum clearances shown. Make sure there is sufficient space above the Internal Strainer access cover to remove the strainer (minimum of 290mm)
3. Make piping connections with rubber “No Hub” connectors
4. Keep the outlet piping as straight as possible and use only “sweep” connections
5. Install a vent on the outlet piping
6. Fill the tank with water before energising the power to the motor and heater
7. Do not install “P” trap on outlet connection of the tank (the unit includes an internal gas trap)
8. Do not reduce the pipe size on the outlet piping
9. Do not pressure test the unit.
10. Installation should comply to AS3500 - National Australian Plumbing Code and any other local and applicable codes
11. Installation should only be performed by a qualified plumbing contractor.

Disclaimer: Specification subject to change without prior notice